EL	ELECTRIC CONNECTION
DI	DEIONIZED WATER
CW	COLD WATER
CA	COMPRESSED AIR
DR	DRAIN
ELB	ELECTRIC FOR BOILER
CS	CHILLED WATER SUPPLY (OPT.)
CR	CHILLED WATER RETURN (OPT.)
CA	COMPRESSED AIR

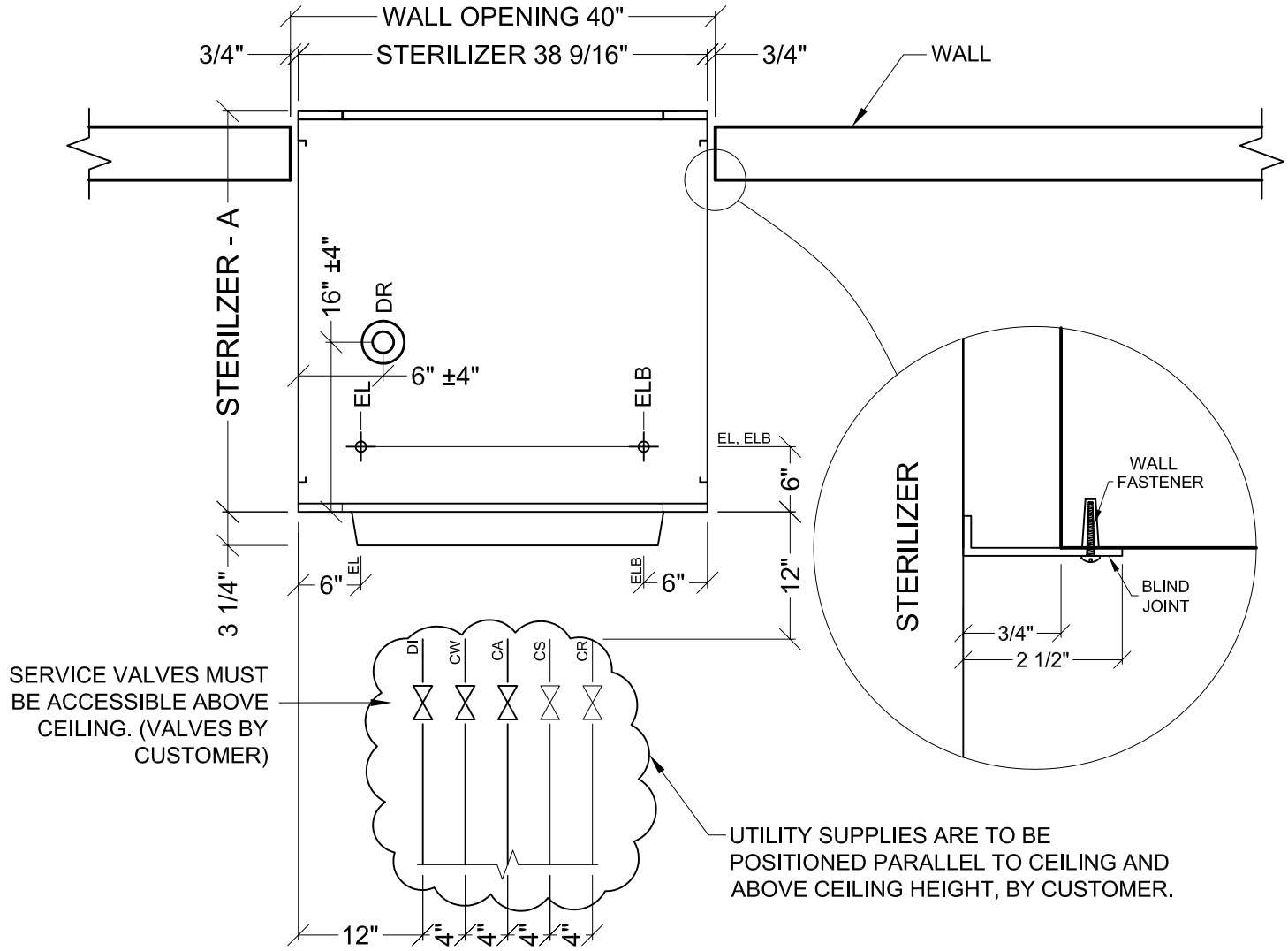

STERILIZER MODEL	A
606 VS2-E	37 3/4"
609 VS2-E	49 1/2"
612 VS2-E	61 1/2"

SERVICE VALVES BY CUSTOMER

Belimed
Infection Control
13840 S.W. 119 Avenue - Miami, FL 33186-6006
(305) 252-3338 - Fax: (305) 234-1115
E-mail: home@bellmedusa.com

ELECTRIC BELIMED STERILIZER

DOUBLE DOOR, VERTICAL STERILIZER

Dwg. No. : STVS2-Er7	Date : 10/23/06	Scale : 3/4" = 1'	Revision : 7
Top view of sterilizer, with electric steam generator.		CAD Operator : N G	
		Pages : 1 of 5	EQUIPMENT TOP VIEW

EL	ELECTRIC CONNECTION
DI	DEIONIZED WATER
CW	COLD WATER
CA	COMPRESSED AIR
DR	DRAIN
ELB	ELECTRIC FOR BOILER
CS	CHILLED WATER SUPPLY (OPT.)
CR	CHILLED WATER RETURN (OPT.)

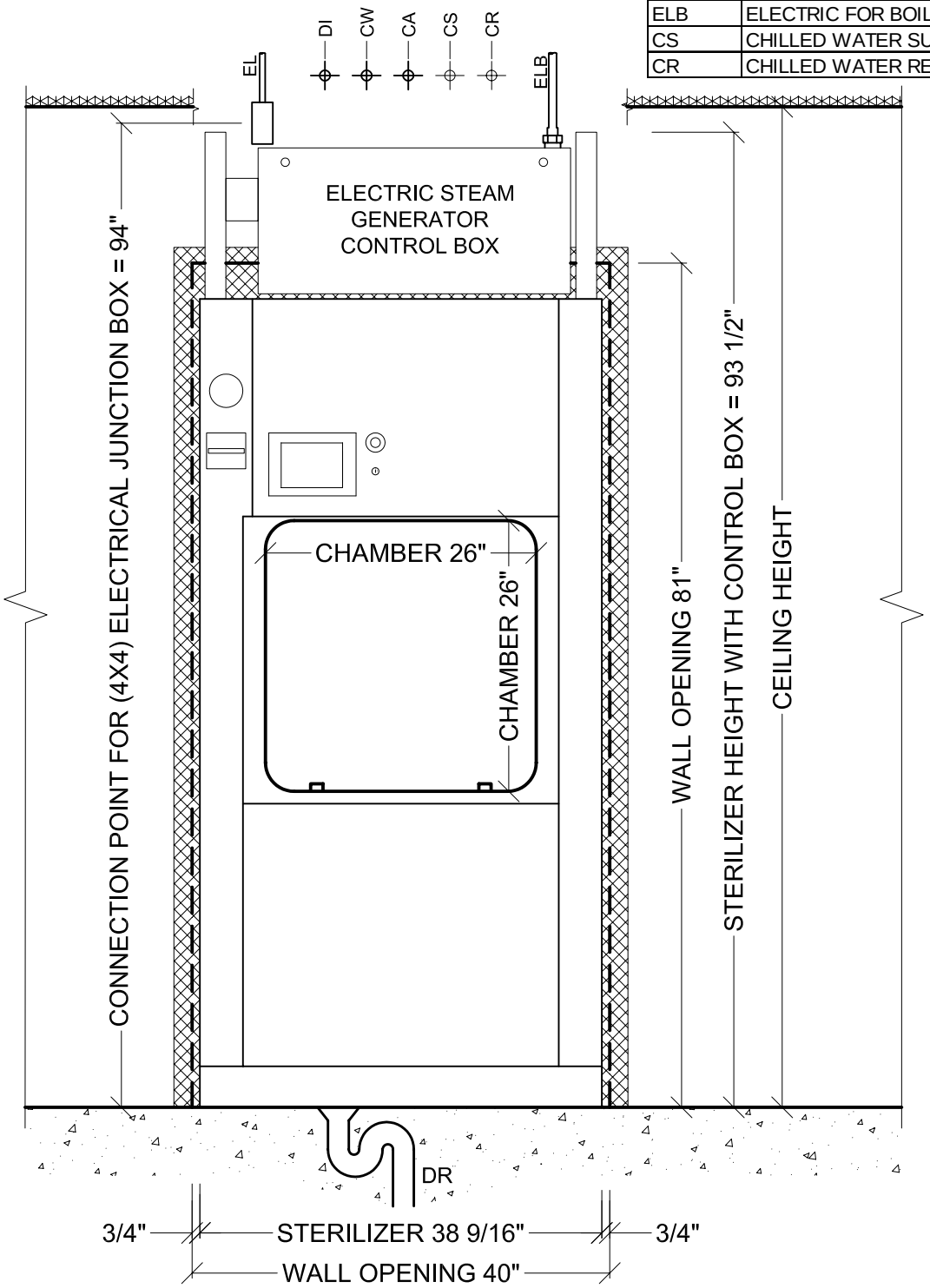

OPTIONAL STAINLESS STEEL TRIM.

Belimed
Infection Control
13840 S.W. 119 Avenue - Miami, FL 33186-6006
(305) 252-3338 - Fax: (305) 234-1115
E-mail: home@bellmedusa.com

ELECTRIC BELIMED STERILIZER

DOUBLE DOOR, VERTICAL STERILIZER

Dwg. No.: STVS2-Er7	Date: 10/23/06	Scale: 3/4" = 1'	Revision: 7
Front view of sterilizer, with electric steam generator.		CAD Operator: N G	
		Pages: 2 of 5	EQUIPMENT FRONT VIEW

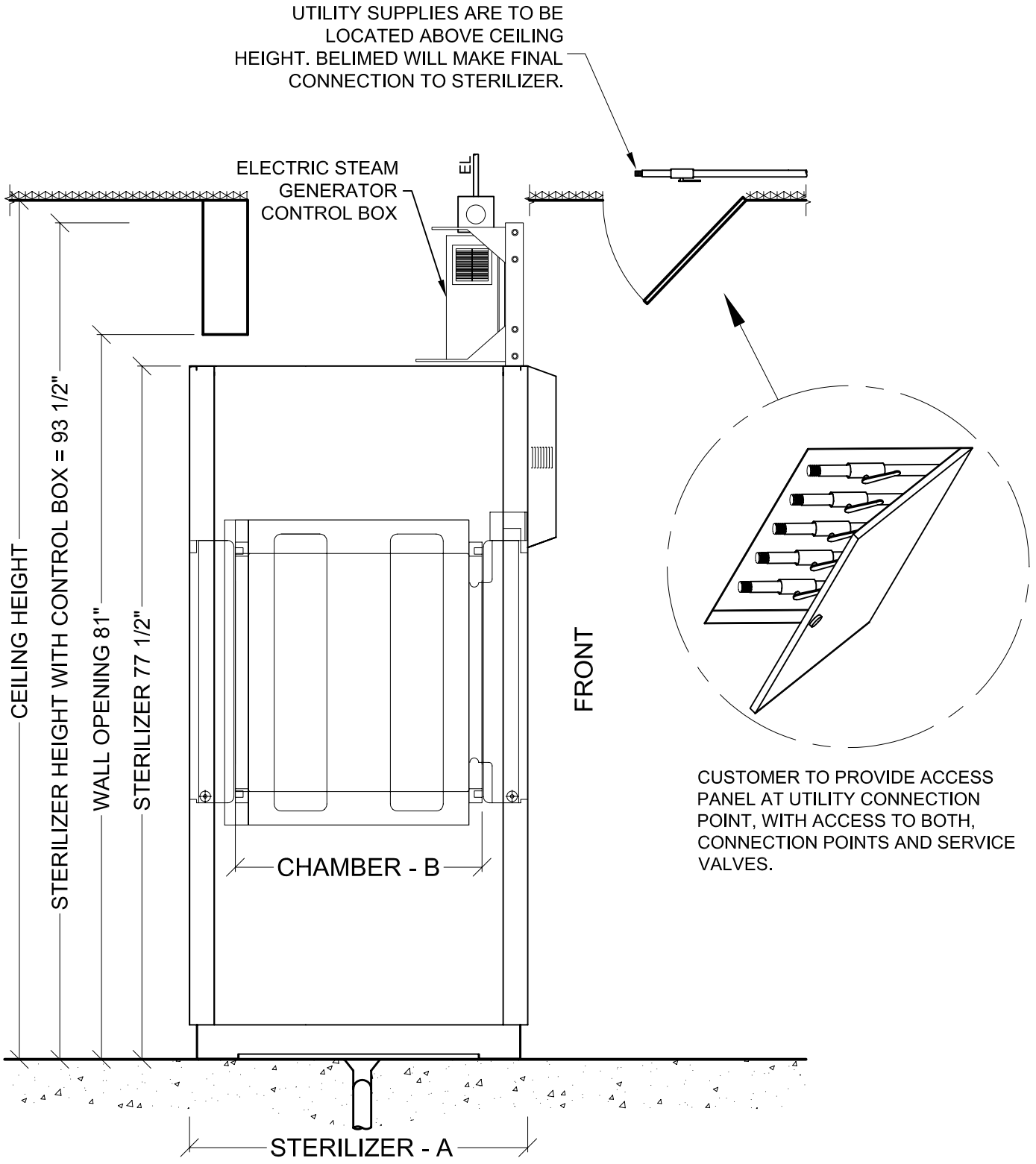

STERILIZER MODEL	A
606 VS2-E	37 3/4"
609 VS2-E	49 1/2"
612 VS2-E	61 1/2"

Belimed
Infection Control
13840 S.W. 119 Avenue - Miami, FL 33186-6006
(305) 252-3338 - Fax: (305) 234-1115
E-mail: home@bellmedusa.com

BELIMED STERILIZER

DOUBLE DOOR, VERTICAL STERILIZER

Dwg. No.: STVS2-Er7	Date: 10/23/06	Scale: 3/4" = 1'	Revision: 7
Side view of sterilizer.		CAD Operator: N G	
		Pages: 3 of 5	EQUIPMENT SIDE VIEW

-STAINLESS STEEL ENCLOSURE PANELS CAN BE USED TO COVER THE SIDES AND/OR BACK OF THE STERILIZER WHEN THEY ARE EXPOSED.

-ENCLOSURE PANELS ARE ALSO AVAILABLE TO COVER THE SPACE BETWEEN THE TOP OF THE STERILIZER AND THE CEILING.

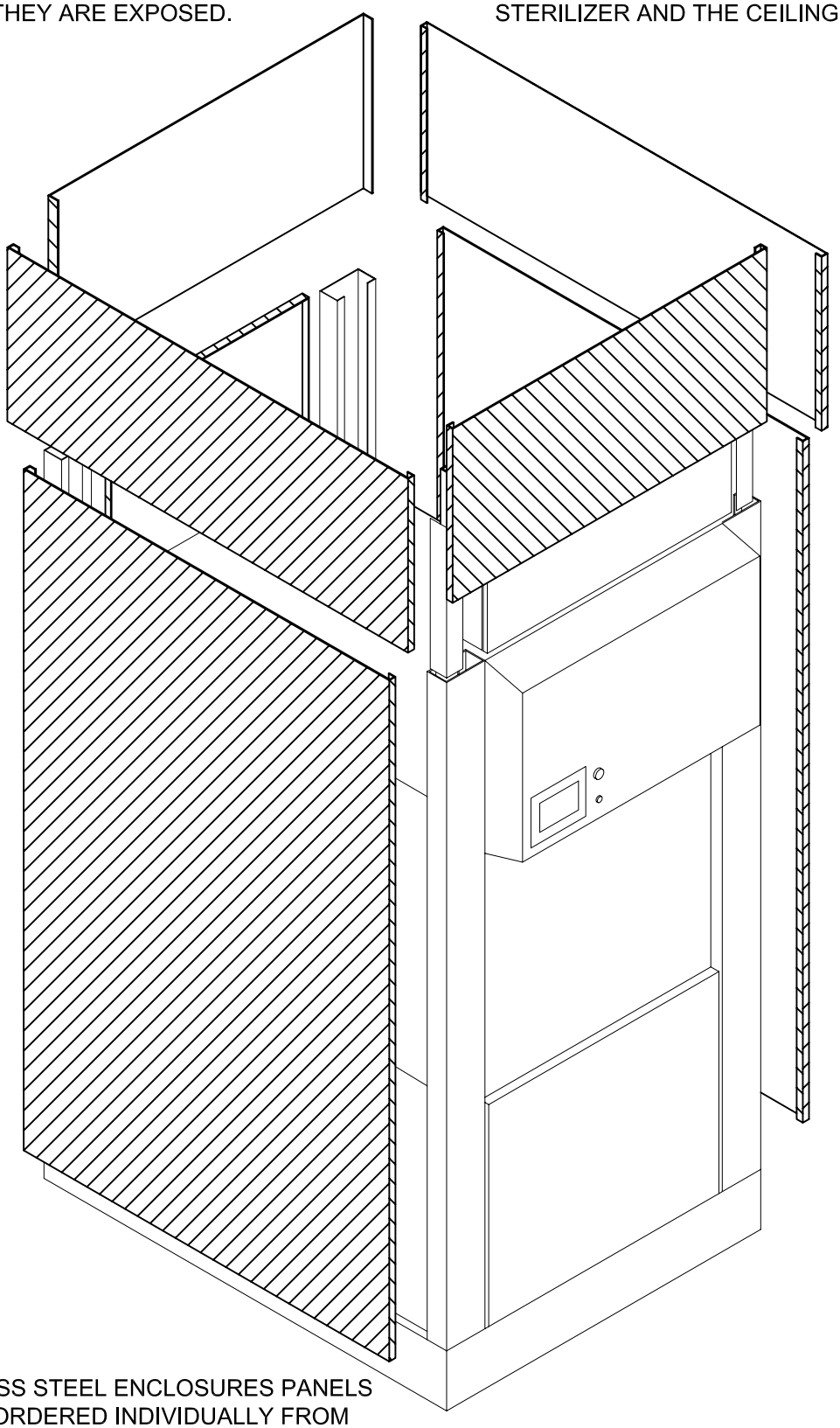

STAINLESS STEEL ENCLOSURES PANELS CAN BE ORDERED INDIVIDUALLY FROM BELIMED AT AN ADDITIONAL COST.

Belimed
Infection Control
13840 S.W. 119 Avenue - Miami, FL 33186-6006
(305) 252-3338 - Fax: (305) 234-1115
E-mail: home@bellmedusa.com

ELECTRIC BELIMED STERILIZER

DOUBLE DOOR, VERTICAL STERILIZER

Dwg. No.: STVS2-Er7	Date: 10/23/06	Scale: 3/4" = 1'	Revision: 7
Optional stainless steel enclosures available through Belimed at an additional cost.		CAD Operator: N G	
		Pages: 4 of 5	OPTIONAL ENCLOSURES

(606-E , 609-E , 612-E) VS1/VS2 STERILIZERS - TECHNICAL DATA

Ref.	Utility	Connection		Pressure				Peak Consumption*				Consumption/Load*			
		Size	Type	606	609	612	units	606	609	612	units	606	609	612	units
CW	Cold Water	1/2"	FNPT	30-70			PSIG	4.4	5.2		gal/min	42	50	58	gal
DI	Deionized Water	3/8"		30-70				0.21	0.29	0.36	gal/min	3.5	4.2	4.9	gal
CA	Compressed Air	1/4"		70-100				0.18			CFM	11			ft^3
EL	Electric Supply	4X4 junction box w/ receptacle						1.7			kW	0.5			kWh
ELB	Electric Supply (Boiler)	1 1/4" EMT						45		55	kW	10	12.5	15	kWh
DR	Open Drain	Indirect drain						4	5.3		gal/min	46	54	62	gal

Optional utilities for chilled water cooling (used for reduction of cold water consumption).

CS	Chilled Water supply	3/4"	NPT	30-70	PSIG	8.8	gal/min	25k	31k	37k	BTU
CR	Chilled Water Return	3/4"									
CW	Cold Water	1/2"	FNPT	30-70	PSIG	4.4	gal/min	2.6			gal

Carry-in Dimensions	606	609	612	units
Height	78	78	78	in.
Width	39	39	39	
Length	38	50	61	

Weights	606 VS1	609 VS1	612 VS1	units	606 VS2	609 VS2	612 VS2	units
Transport	2050	2248	2381	lb	2172	2447	2513	lb
Operating	2359	2557	2866		2491	2690	2998	
Test	3108	3571	4166		3241	3703	4299	

Utility Notes (Requirements per sterilizer by Customer):

CW	Cold Water	Cold water is used to prime the condensate pump and cool the condensate. Colder water temperatures will result in less water consumption. Water should be softened to 0-60 ppm. Use sediment filter similar to *Grainger part No*.4BA87. Backflow prevention is c
DI	Deionized Water	Deionized water or RO water is used to produce pure steam with the integrated steam generator (boiler).This can be substituted with softened water if pure steam is not desired.
CA	Compressed Air	Air must be dry and oil free. Used to operate pneumatic control system.
EL	Electric Supply	3-Phase ; 208 V ; 60 Hz ; Provide 20 A circuit protection with receptacle: NEMA 15-20R; *Grainger part No.* 5C793.
ELB	Electric Supply (boiler)	3-Phase ; 480 V ; 60 Hz ; Provide the following circuit protection: 60 A for 606 and 609 ; 80 A for 612.
DR	Open Drain	Provide floor drain and trap.
EX	Equipment Area Exhaust	Provide sufficient air exhaust to remove the following heat rejection: 1.5 kW for 606; 1.8 kW for 609; 2.0 kW for 612.
CS	Chilled Water Supply (Optional)	Feed water at ~50ºF with a temperature difference ΔT of 15 K.
CR	Chilled Water Return (Optional)	Pressure difference ΔP CS/CR must be greater than 7 PSIG.
SRV1	Safety Pressure Relief Valve (chamber)	Provide connection to safety relief valve and pipe to drain, atmosphere, or as required by local code. Outlet size = 1" FNPT.
SRV2	Safety Pressure Relief Valve (jacket)	Provide connection to safety relief valve and pipe to drain, atmosphere, or as required by local code. Outlet size = 1" FNPT.

*Consumptions calculated under Pre-vac cycle at 270ºF and water temperature of 68ºF.

Additional Information:
- FNPT = Female pipe thread
- NPT = Male pipe thread
- Customer must provide service valves for water supply.
- For alternate utility connections, please contact Belimed

Belimed
Infection Control